A Nidec Group Company
Nidec Motors & Actuators
All for dreams

Series DCK31
Motor type 404 990

Design Data	
Commutation	Brushed
Direction of rotation	Bi-directional
Bearing type	A:Ball - B:Sleeve

Performance data		
Rated voltage [V]	U_N	24
Nominal torque [Nm]	M_N	3.00
No-load speed [min^{-1}]	n_0	195.0
Nominal power [W]	P_N	52.5
Nominal current [A]	I_N	5.0
Nominal force [kN]	F_N	0.00
Duty cycle		s1

Sensor data	
Pulses	207
Output channels	1

Other data	
Gear ratio	53/2
Gear wheel material	plastic
Suppression components	6µH, 1nF
Enclosure class	IP 30
Weight [kg]	1.210

Remarks: d = for thread-forming screw M6 DIN ISO 965-2

0266 AR

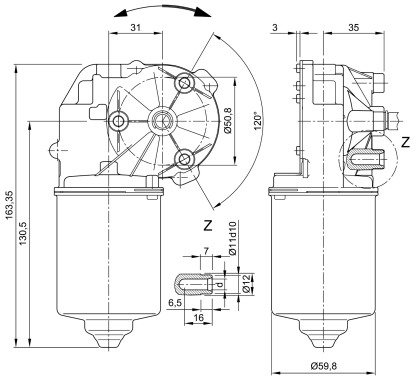

Motor picture

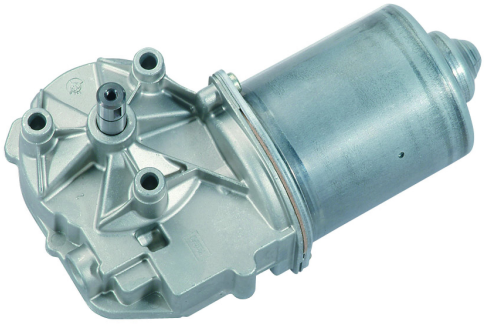

Characteristic curves

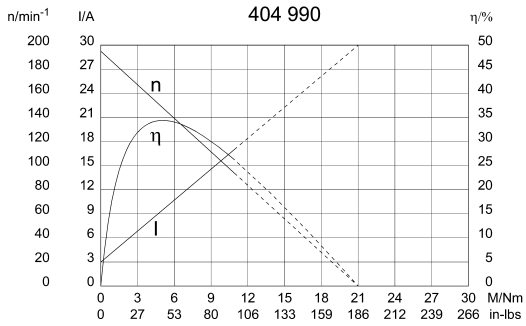

Output shaft drawing (W), Wiring diagrams (S) and Connector layout (K)

W 328

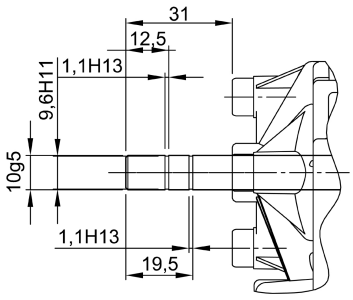

S 30

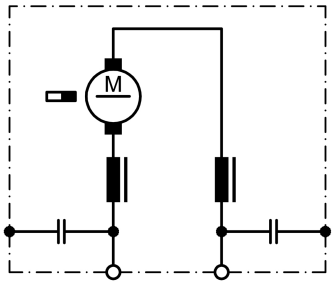

S150

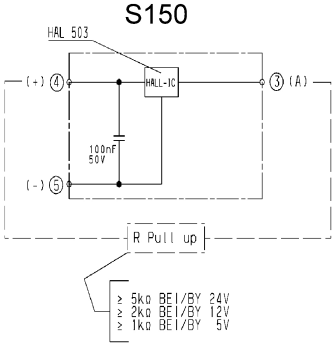

NIDEC MOTORS & ACTUATORS
Europe: +49 7142 5083369 | North America: +52 656 629 3800
www.nidec-ma.com
sales@nidec-ma.com

Output shaft drawing (W), Wiring diagrams (S) and Connector layout (K)

K 320

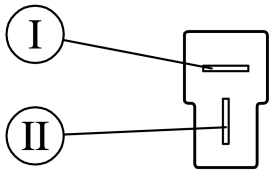

Flat plug (DIN 46244) 6,3x0,8 mating with receptacle housing part#180907, drwg# C-180907& Receptacles for tabs, conductor cross section 0,5-1,5 sqmm (20-18AWG) part# 925603-x, drwg# 925603 www.tycoelectronics.com

K 326

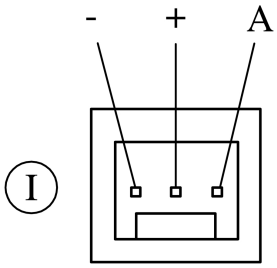

MAS-CON solder tail MLAS 100-3435 mating with end connector CE 100F-22-xx-x-x or CEP 100F-22-xx-x-x

K 321

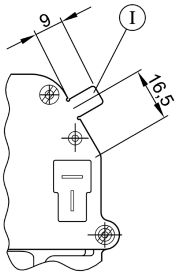

I Ground connection
Blade terminal 6.3 x 0.8 DIN 46 244

Notes